REVISIONS		
REV	DESCRIPTION	APPR / DATE
A	PRODUCTION RELEASE PER ECOEAW1326 DEM	10/02/23

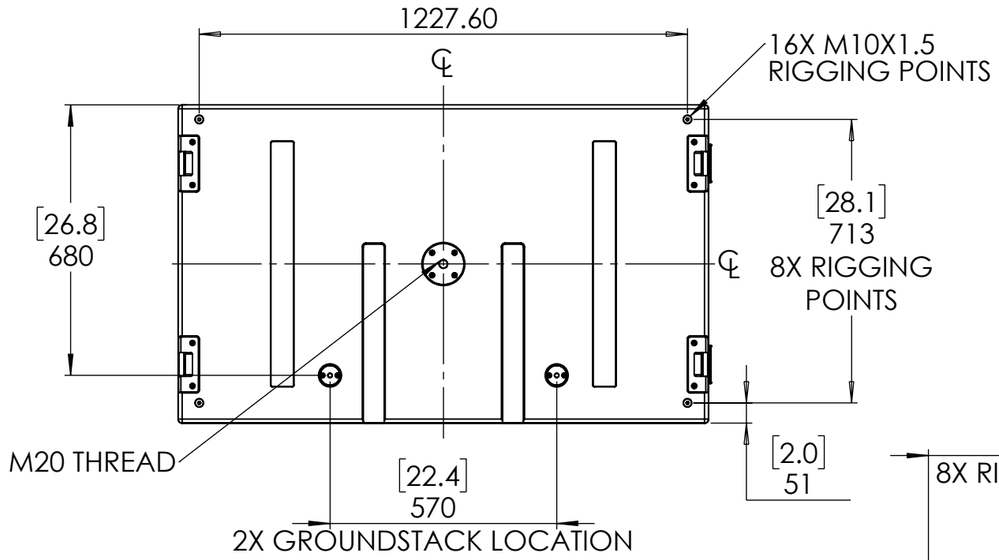

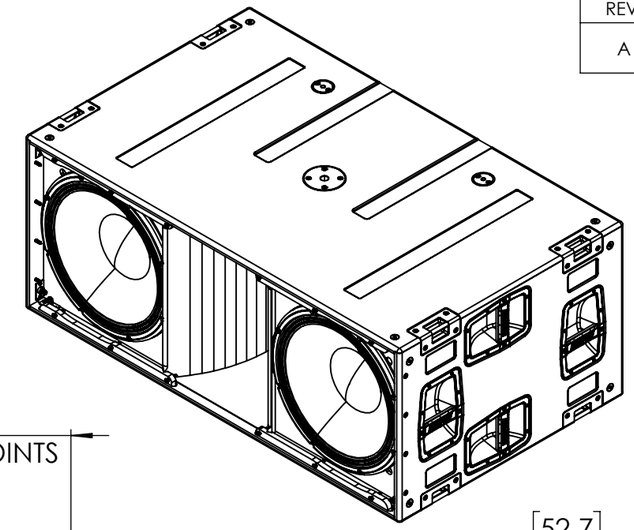

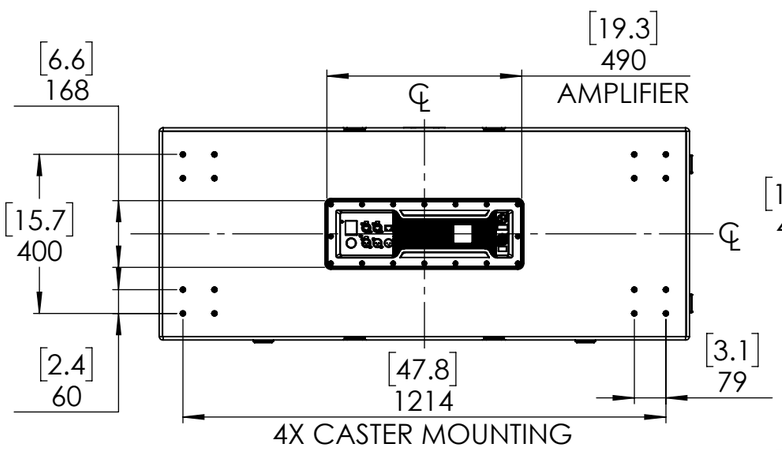

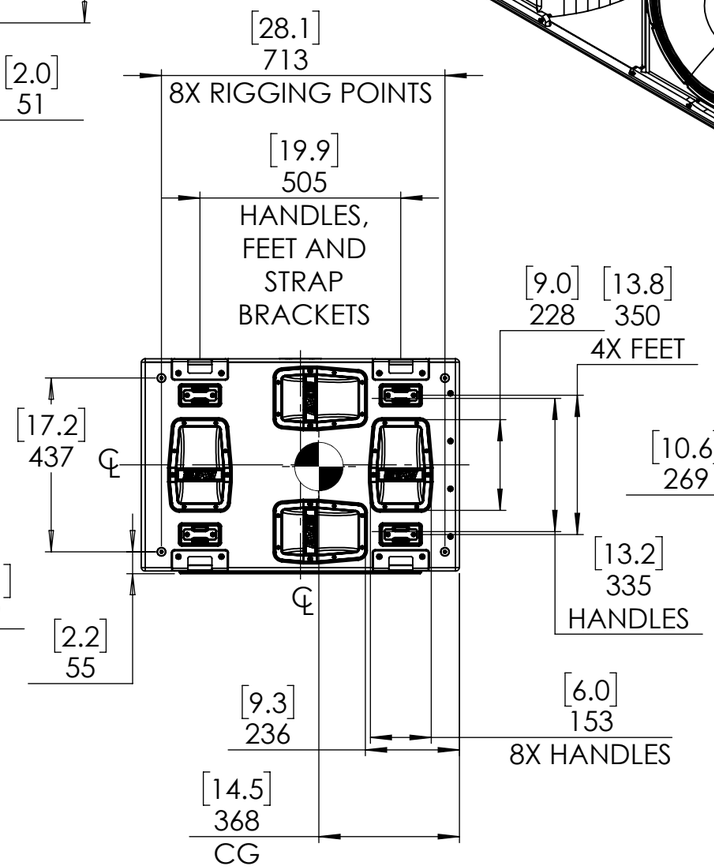

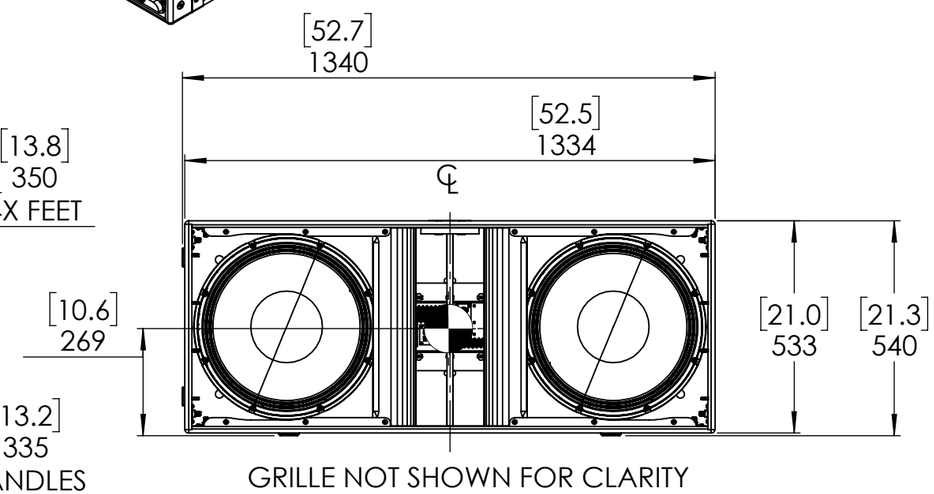

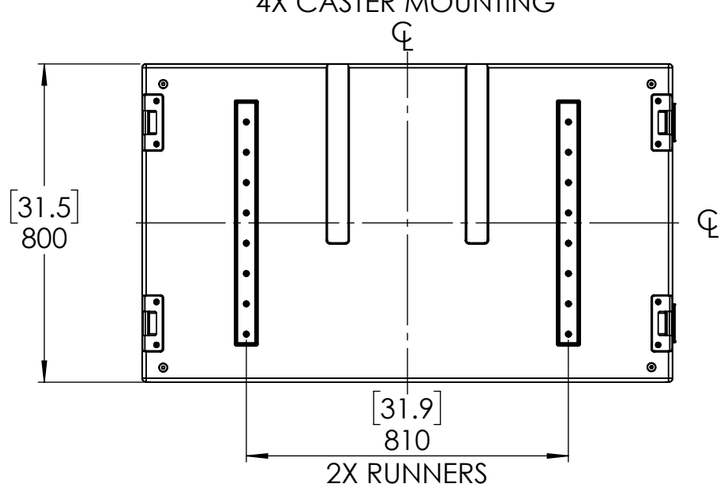

NOTES:
1. -⊕- INDICATES THE CENTER OF GRAVITY
2. WEIGHT APPROXIMATELY 92 kg [203 lb]
3. SHIPPING WEIGHT APPOX 107 kg [235 lb]

THIRD ANGLE PROJECTION

THIS DRAWING IS THE PROPERTY OF EAW AND SHALL NOT BE COPIED, REPRODUCED, OR USED AS THE BASIS FOR MANUFACTURE OR SALE OF APPARATUS WITHOUT WRITTEN AUTHORIZATION. DO NOT SCALE DRAWING.

UNLESS OTHERWISE SPECIFIED:
ALL DIMENSIONS ARE IN MILLIMETERS
DUAL [INCHES] DIMENSIONS FOR REF ONLY

TOLERANCE IN MILLIMETERS
X±.8 X.X±.4 X.XX±.15
FRACTIONS ±1/32
ANGLES ±1/2°
(X.XX) = REF DIMS
NO TOLERANCE IMPLIED

TSC = THEORETICAL SHARP CORNER

DIMENSIONS ACROSS CENTERLINES TO BE SYMETRICAL

EAW EASTERN ACOUSTIC WORKS
ONE MAIN STREET WHITINSVILLE, MA 01588 USA

TITLE:
DWG CUSTOMER SBX218

B	SHEET 1 OF 1	SCALE: 1:15
DWG. NO.	2071909-CD	REV A

SOLID WORKS
2071909-CD (A) ASSY FNL SBX218